CSEC Mathematics

January 2023 – Paper 2

Solutions

Kerwin Springer

Best Online Lessons in the Caribbean
WhatsApp **+1868-310-1306** for more information

SECTION I

Answer ALL questions.

All working must be clearly shown.

1. (a) (i) By rounding each number in the expression below to **one significant figure**, estimate the value of [2]

$$\frac{\sqrt{108}}{19.72+5.296}$$

$$\frac{\sqrt{108}}{19.72+5.296} = \frac{\sqrt{100}}{20+5}$$

$$= \frac{10}{25}$$

$$= \frac{2}{5} \text{ or } 0.4$$

(ii) Find the EXACT value of

$$3\frac{3}{8} \div \left(\frac{5}{12} + \frac{1}{3}\right)$$

Give your answer as a mixed number in its **simplest** form. [3]

$$3\frac{3}{8} \div \left(\frac{5}{12} + \frac{1}{3}\right) = \frac{27}{8} \div \left(\frac{5}{12} + \frac{4}{12}\right)$$

$$= \frac{27}{8} \div \frac{9}{12}$$

$$= \frac{\cancel{27}^{3}}{\cancel{8}_{2}} \times \frac{\cancel{12}^{3}}{\cancel{9}_{1}}$$

Kerwin Springer

$= \frac{9}{2}$

$= 4\frac{1}{2}$

(b) Due to the COVID-19 pandemic, the number of available seats in a hall was reduced from 125 to 93. Calculate the percentage decrease in the number of available seats. [2]

Percentage decrease $= \frac{125-93}{125} \times \frac{100}{1}$

$= 25.6\%$

(c) Mica invests a certain amount of money in a bank that pays compound interest at a rate of 2.5% per annum. At the end of 2 years, the value of her investment is \$7 564.50.

Calculate the amount Mica invests.

$$\left(\begin{array}{c}\text{Compound interest: } A = P\left(1+\frac{r}{100}\right)^n, \text{where, } A = \text{ total amount after } n \text{ years} \\ P = \text{ principal or original value;} \\ r = \text{ rate of interest per annum; } n = \text{ number of years the money is invested}\end{array}\right)$$

$A = P\left(1+\frac{r}{100}\right)^n$

$7564.50 = P\left(1+\frac{2.5}{100}\right)^2$

$7564.50 = P(1.025)^2$

Kerwin Springer

$$P = \frac{7564.50}{(1.025)^2}$$

$$P = \$7200$$

∴ The amount Mica invests is $7200.

Total 9 marks

Kerwin Springer

2. (a) Simplify:

(i) $(x^3)^2$ [1]

$(x^3)^2 = x^{3\times 2}$

$= x^6$

(ii) $y^8 \div y^{-5}$ [1]

$y^8 \div y^{-5} = y^{8-(-5)}$

$= y^{8+5}$

$= y^{13}$

(b) (i) Factorize:

(a) $xy - y^2$ [1]

$xy - y^2 = y(x - y)$

(b) $x^2 - y^2$ [1]

$x^2 - y^2 = (x + y)(x - y)$ [difference of two squares]

Kerwin Springer

(ii) Hence, simplify the expression

$\frac{xy-y^2}{x^2-y^2}$. [1]

$\frac{xy-y^2}{x^2-y^2}$

$= \frac{y\cancel{(x-y)}}{(x+y)\cancel{(x-y)}}$

$= \frac{y}{x+y}$

(c) The diagram below shows 2 rectangles, M and N, with their dimensions expressed in terms of x.

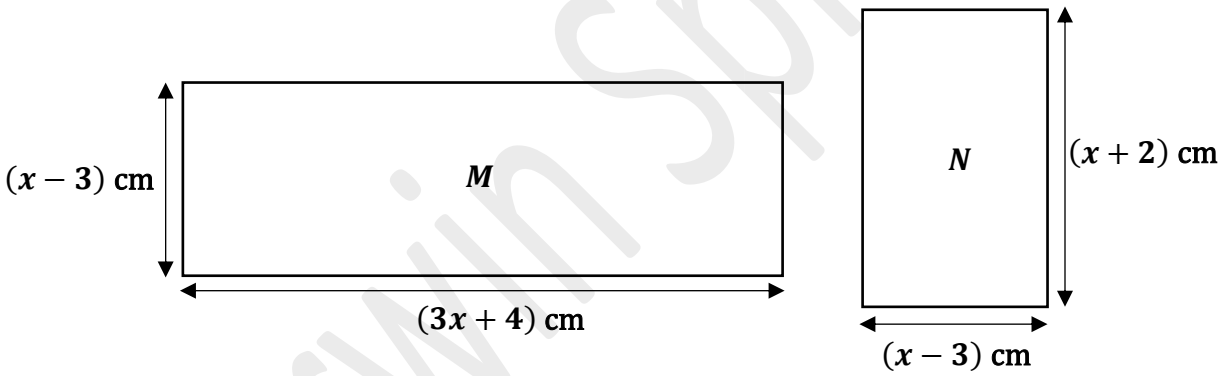

Given that the difference between the areas of the two rectangles is 64 cm^2, show that $x^2 - 2x - 35 = 0$. [4]

Area of rectangle $M = (x-3)(3x+4)$

$= 3x^2 + 4x - 9x - 12$

$= 3x^2 - 5x - 12$

Kerwin Springer

Area of rectangle $N = (x+2)(x-3)$

$$= x^2 - 3x + 2x - 6$$

$$= x^2 - x - 6$$

Now,

Difference = Area of rectangle M − Area of rectangle N

$$64 = 3x^2 - 5x - 12 - (x^2 - x - 6)$$

$$64 = 3x^2 - 5x - 12 - x^2 + x + 6$$

$$64 = 2x^2 - 4x - 6$$

$$0 = 2x^2 - 4x - 6 - 64$$

$$0 = 2x^2 - 4x - 70$$

$$0 = x^2 - 2x - 35$$

$\therefore x^2 - 2x - 35 = 0$

Q.E.D.

Total 9 marks

Kerwin Springer

3. The following diagram shows 3 quadrilaterals, P, Q and R on a square grid. Q and R are the images of P after it underwent 2 different transformations.

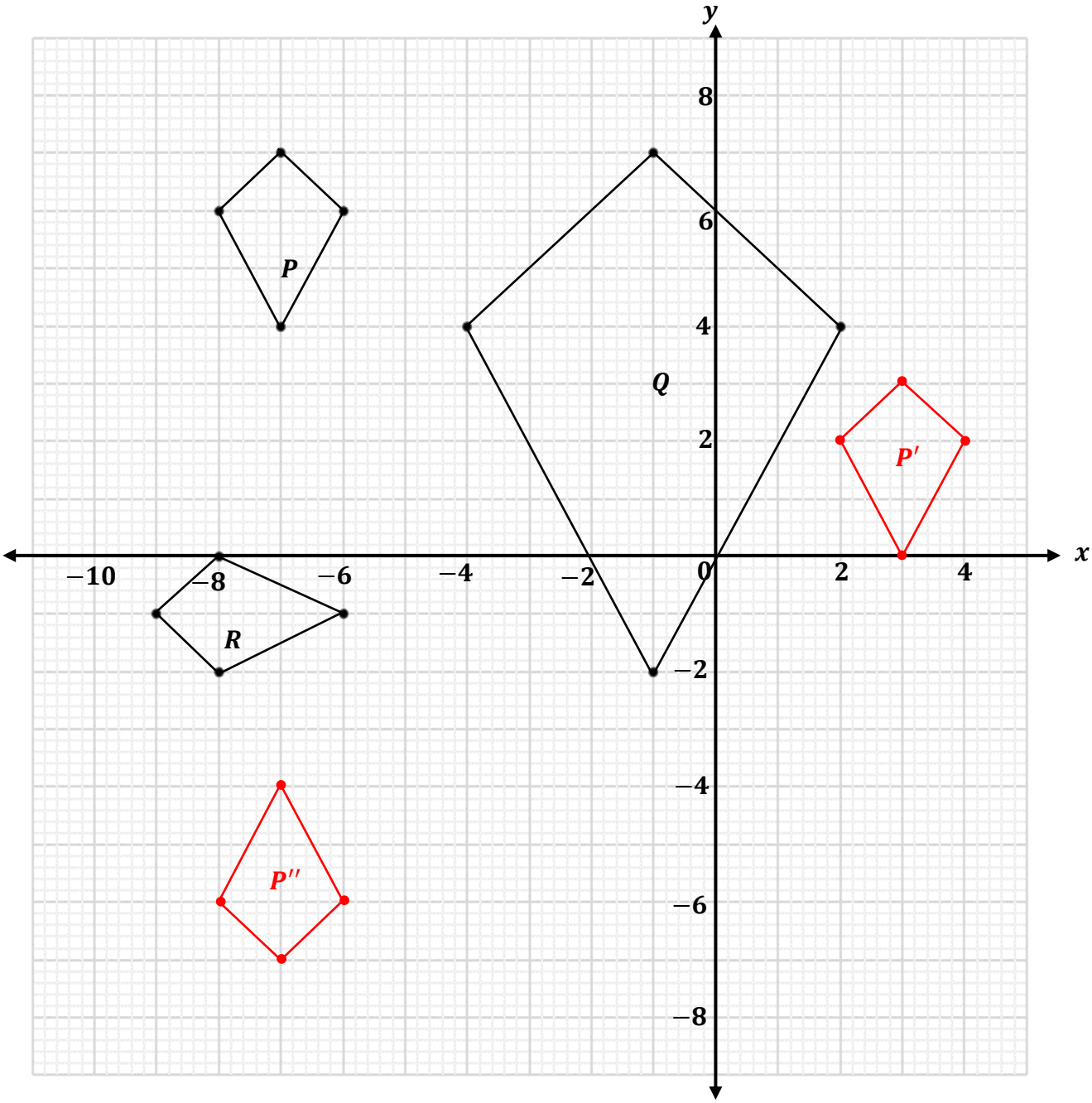

(a) On the grid **on page 9**, draw the image of quadrilateral P after a

(i) translation by the vector $\begin{pmatrix} 10 \\ -4 \end{pmatrix}$. Label this image P'. [1]

Quadrilateral P		Image P'
$(-7, 7)$	$\rightarrow$	$(3, 3)$
$(-8, 6)$	$\rightarrow$	$(2, 2)$
$(-7, 4)$	$\rightarrow$	$(3, 0)$
$(-6, 6)$	$\rightarrow$	$(4, 2)$

See graph above for the image P'.

(ii) reflection in the line $y = 0$. Label this image P''. [2]

Quadrilateral P		Image P''
$(-7, 7)$	$\rightarrow$	$(-7, -7)$
$(-8, 6)$	$\rightarrow$	$(-8, -6)$
$(-7, 4)$	$\rightarrow$	$(-7, -4)$
$(-6, 6)$	$\rightarrow$	$(-6, -6)$

See graph above for the image P''.

Kerwin Springer

(b) Describe fully a **single** transformation that maps Quadrilateral P onto

(i) Quadrilateral Q [3]

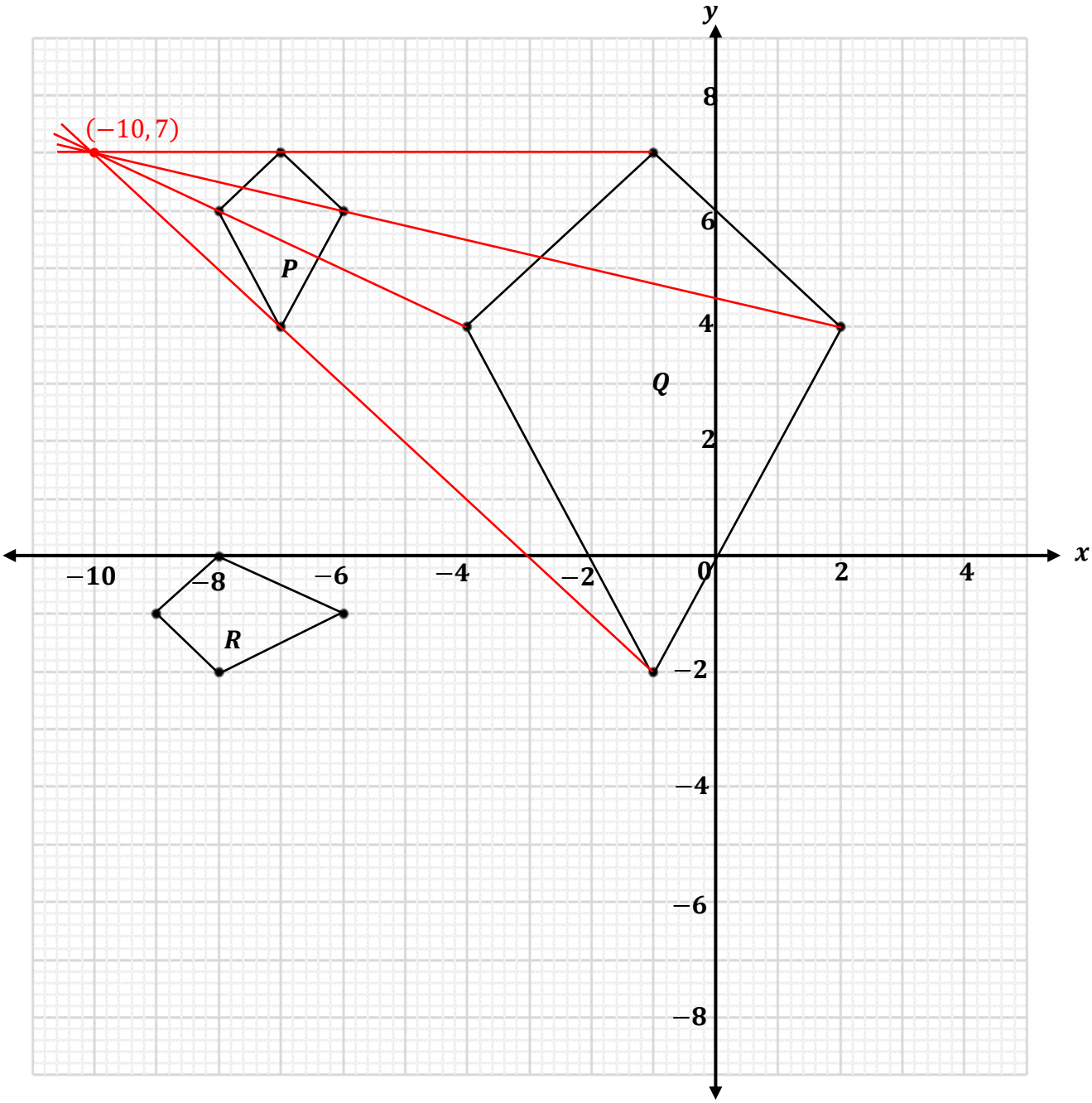

A single transformation that maps Quadrilateral P onto Quadrilateral Q is an enlargement of scale factor 3 whose centre of enlargement is $(-10, 7)$.

(ii) Quadrilateral R [3]

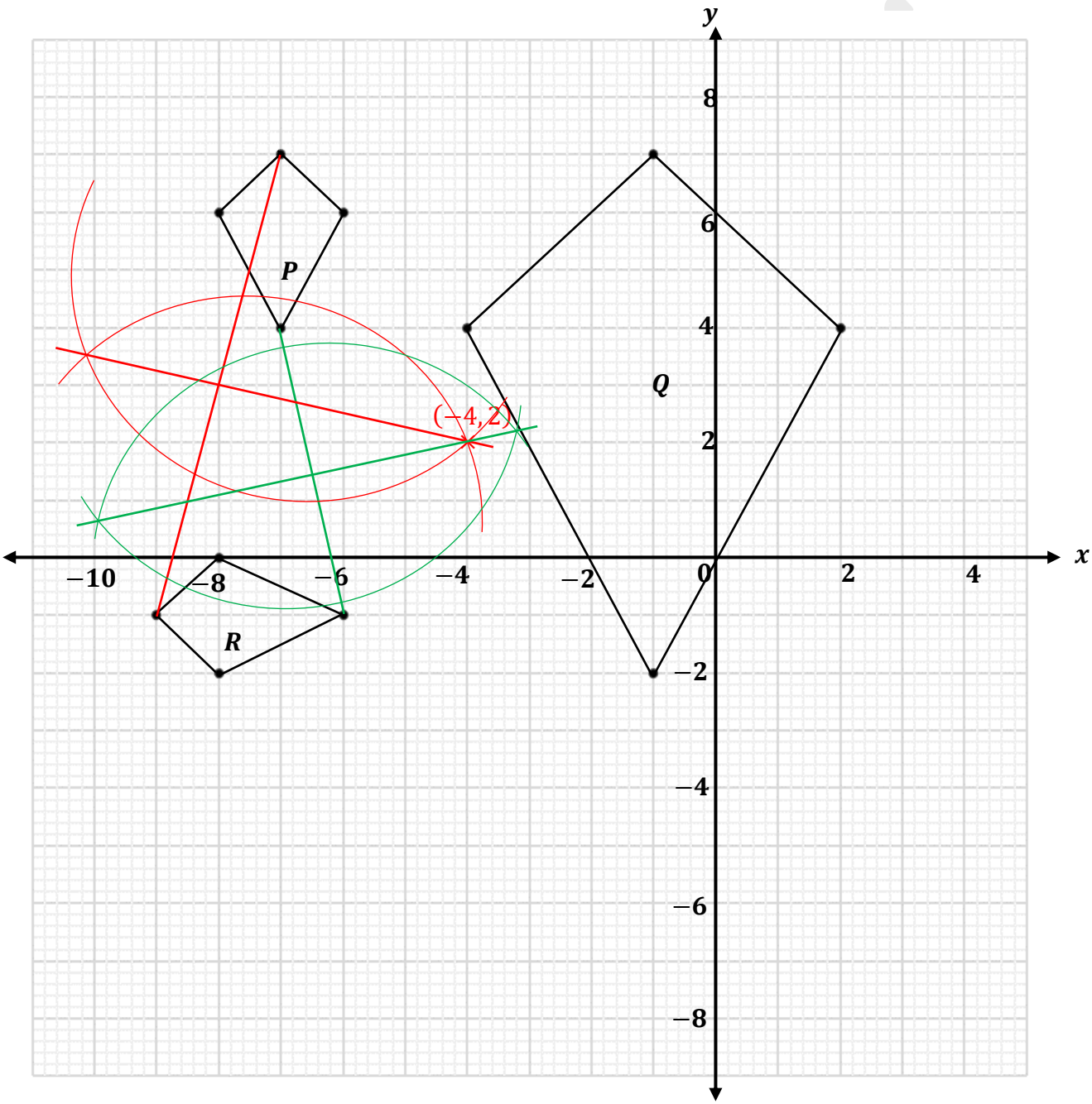

A single transformation that maps Quadrilateral P onto Quadrilateral R is an anticlockwise rotation of $90°$ about the centre $(-4, 2)$.

Total: 9 marks

Kerwin Springer

4. Lines L and M are drawn on the square grid below.

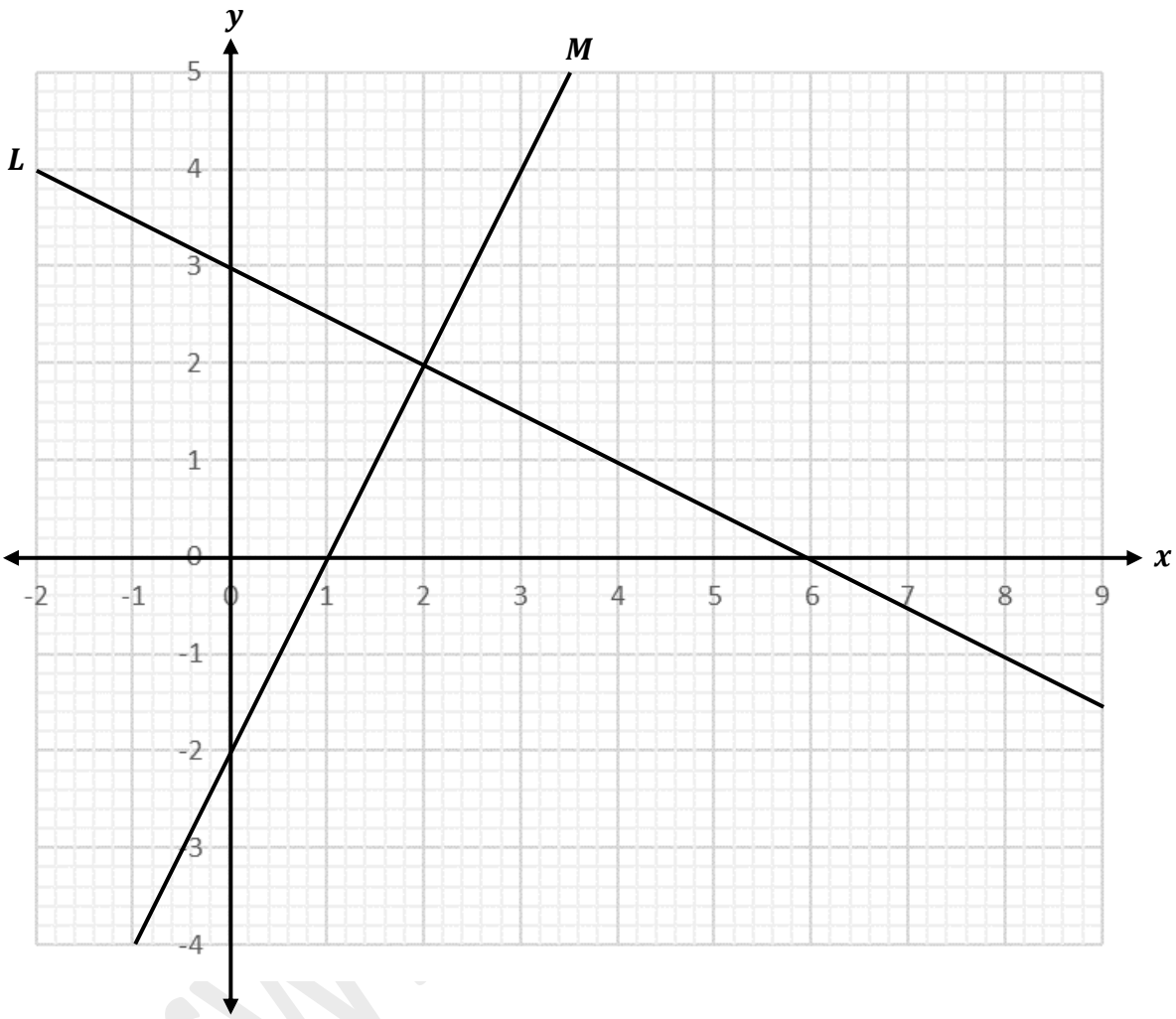

(a) Write down the coordinates of the

(i) x-intercept of Line L [1]

The coordinates of the x-intercept of Line L is $(6, 0)$.

(ii) y-intercept of Line M [1]

The coordinates of the y-intercept of Line M is $(0, -2)$.

(b) The equation of Line L is $x + 2y - 6 = 0$. Find the value of k given that the point $(9, k)$ lies on Line L. [2]

$x + 2y - 6 = 0$

Substituting point $(9, k)$ gives:

$9 + 2k - 6 = 0$

$2k = 6 - 9$

$2k = -3$

$k = -\frac{3}{2}$

(c) Find the equation of Line M, in the form $y = mx + c$. [2]

From graph, the point $(1, 0)$ lies on Line M.

The y-intercept is -2.

Substituting point $(1, 0)$ and $c = -2$ into $y = mx + c$ gives:

$0 = m(1) - 2$

Kerwin Springer

$0 = m - 2$

$m = 2$

$\therefore$ Equation of Line M is: $y = 2x - 2$ which is in the form $y = mx + c$,

where $m = 2$ and $c = -2$.

(d) Show by calculation, that Line L and Line M are perpendicular. [2]

From graph, the point $(6, 0)$ lies on Line L.

The y-intercept is 3.

Substituting point $(6, 0)$ and $c = 3$ into $y = mx + c$ gives:

$0 = m(6) + 3$

$0 = 6m + 3$

$6m = -3$

$m = -\frac{3}{6}$

$m = -\frac{1}{2}$

Gradient of Line $L = -\frac{1}{2}$

Gradient of Line $M = 2$

Kerwin Springer

Now,

Product of gradients $= \left(-\frac{1}{2}\right)(2)$

$= -1$

Since the product of the gradients of the two lines is equal to -1, then Line L and Line M are perpendicular.

Q.E.D.

(e) Line L and Line M represent the graph of a pair of simultaneous equations. Using the graph on **page 11**, write down the solution to the pair of simultaneous equations. [1]

From the graph, the solution to the pair of simultaneous equations is $(2, 2)$.

This is the point at which both lines intersect each other.

Total 9 marks

Kerwin Springer

5. The cumulative frequency curve below shows information about the times taken by 200 students to solve a Mathematics Olympiad problem.

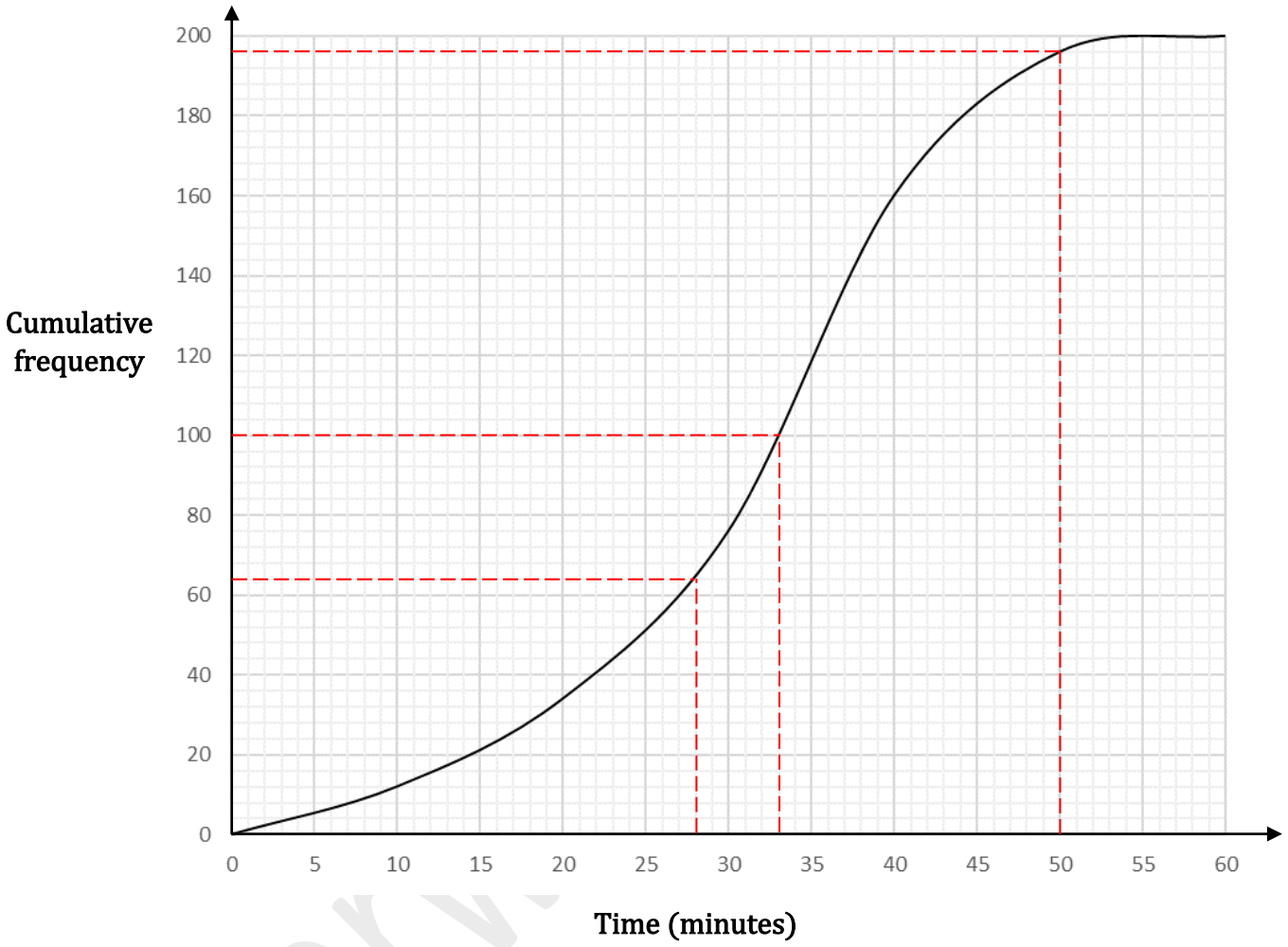

(a) Using the cumulative frequency curve shown above, find an estimate for the

(i) number of students who took more than 50 minutes to solve the problem

[1]

From graph, when $x = 50$, $y = 196$.

Now, $200 - 196 = 4$.

Best Online Lessons in the Caribbean
WhatsApp **+1868-310-1306** for more information

$\therefore$ The number of students who took more than 50 minutes to solve the problem is 4 students.

(ii) median time taken to solve the problem [1]

The median occurs at the $\frac{n+1}{2} = \frac{200+1}{2} = \frac{201}{2} = 100.5^{\text{th}}$ value.

From graph, the median is 33 minutes.

(iii) probability that a student chosen at random took **at most** 28 minutes to solve the problem. [2]

From the graph, when $x = 28, y = 64$.

$$\text{Probability} = \frac{Number\ of\ desired\ outcomes}{Total\ number\ of\ outcomes}$$

$$= \frac{64}{200}$$

$$\text{Probability} = \frac{8}{25}$$

Kerwin Springer

(b) (i) Using the cumulative frequency curve **on page 13**, complete the table below. [3]

Time (minutes)	Midpoint (x)	Frequency (f)	Frequency × Midpoint (fx)
$1-10$	5.5	12	66
$11-20$	15.5	22	341
$21-30$	25.5	42	1071
$31-40$	35.5	84	2982
$41-50$	45.5	36	1638
$52-60$	55.5	4	222
		$\sum f = 200$	$\sum fx = 6320$

(ii) Use the information in the completed table above to calculate an estimate of the average time taken by the students to solve the problem. [2]

$$\bar{x} = \frac{\sum fx}{\sum f}$$

$$= \frac{6320}{200}$$

$$= 31.6 \text{ minutes}$$

∴ The average time taken by the students to solve the problem is 31.6 minutes.

Total 9 marks

Kerwin Springer

6. In this question, use $\pi = \frac{22}{7}$.

The diagram below shows a scaled drawing of a running track. It consists of a rectangle and two semicircles with diameters LN and MP.

$LN = MP = 49\ m$ and $LM = NP = 98\ m$

(a) (i) Show that the TOTAL length of the running track is 350 m. [2]

Perimeter of circle $= 2\pi r$

$= 2 \times \frac{22}{7} \times \frac{49}{2}$

$= 154\ m$

Now,

Total length of running track $= 2(98) + 154$

$= 196 + 154$

$= 350\ m$

Q.E.D.

Kerwin Springer

(ii) Nathan walks at a constant rate of 1.4 m/s. Calculate the time it will take him to walk 7 laps around the track. [1]

Total distance $= 7 \times 350$

$= 2450\ m$

Speed $= 1.4\ m/s$

Now,

Speed $= \frac{Distance}{Time}$

Time $= \frac{Distance}{Speed}$

$= \frac{2450}{1.4}$

$= 1750\ s$

∴ It will take him 1750 s to walk 7 laps around the track.

(b) Tafari runs one lap of the track in 68 seconds.

(i) Determine the number of laps Tafari can complete in one hour, running at the same speed. [2]

1 hour $= 1 \times 60 \times 60$

$= 3600\ s$

Number of laps $= \frac{3600}{68}$

Kerwin Springer

$= 52.9$

$\therefore$ Tafari can run 52 completed laps in one hour.

(ii) Nathan completes running one lap of the track every 72 seconds. Tafari and Nathan start running at the same time from point L on the track. Each completed a number of laps of the track. Calculate the LEAST number of laps that each will complete before they are both at point L again at the same time. [3]

4	72 , 68
17	18 , 17
18	18 , 1
	1 , 1

Now,

$4 \times 17 \times 18 = 1224\ s$

Number of laps Nathan completes $= \frac{1224}{72}$

$= 17$ laps

Kerwin Springer

Number of laps Tafari completes $= \frac{1224}{68}$

$= 18$ laps

Tafari completes ....18.... laps and Nathan completes ....17.... laps.

Total 9 marks

Kerwin Springer

7. The grid below shows the first 3 figures in a sequence. Each figure is made using a set of small squares of unit length that are **both** coloured (shaded) and white (unshaded).

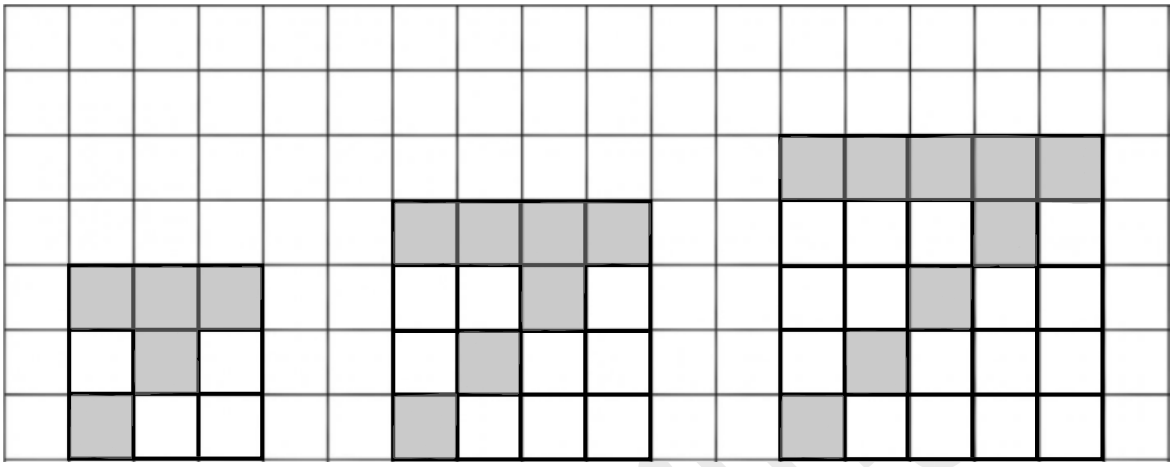

Figure 1 **Figure 2** **Figure 3**

(a) In the space provided below, draw Figure 4 of the sequence. [2]

Figure 4

(b) The number of coloured squares, C, the total number of squares, T and the perimeter of the figure, P, follow a pattern. Study the patterns in the table below and answer the questions that follow.

Complete Rows (i), (ii) and (iii) in the table below.

	Figure Number (F)	Number of Coloured Squares (C)	Perimeter of Figure (P)	Total Number of Squares (T)	
	1	5	12	$(1+2)^2 = 9$	
	2	7	16	$(2+2)^2 = 16$	
	3	9	20	$(3+2)^2 = 25$	
	⋮	⋮	⋮	⋮	
(i)	11	25	52	169	[2]
	⋮	⋮	⋮	⋮	
(ii)	23	49	100	$(23+2)^2 = 625$	[2]
	⋮	⋮	⋮	⋮	
(iii)	n	$2n+3$	$4n+8$	$(n+2)^2 = n^2+4n+4$	[2]

Consider the nth figure.

Number of coloured squares, $C = 2n + 3$

Perimeter of Figure, $P = 4n + 8$

Total Number of Squares, $T = (n+2)^2$

$= n^2 + 4n + 4$

Kerwin Springer

When $n = 11$,

$C = 2(11) + 3$

$= 22 + 3$

$= 25$

When $n = 11$,

$T = (11 + 2)^2$

$= (13)^2$

$= 169$

When $C = 49$,

$2n + 3 = 49$

$2n = 49 - 3$

$2n = 46$

$n = \frac{46}{2}$

$n = 23$

When $n = 23$,

$P = 4(23) + 8$

$= 92 + 8$

$= 100$

Kerwin Springer

(c) How many **white squares** are in Figure 11? [1]

In Figure 11,

Number of white squares = Total squares − Number of coloured squares

$= 169 - 25$

$= 144$

Total 10 marks

Kerwin Springer

SECTION II

Answer ALL questions.

ALGEBRA, RELATIONS, FUNCTIONS AND GRAPHS

8. The functions f, g and h are defined as follows:

$$f(x) = 4x - 1,\ g(x) = x^2 - 5 \text{ and } h(x) = 3^x$$

(a) Find

(i) $g(x-2)$, in its simplest form [2]

$$g(x) = x^2 - 5$$

$$g(x-2) = (x-2)^2 - 5$$

$$= x^2 - 4x + 4 - 5$$

$$= x^2 - 4x - 1$$

(ii) $f^{-1}(11)$ [2]

$$f(x) = 4x - 1$$

Let $y = f(x)$.

$$y = 4x - 1$$

Kerwin Springer

Interchanging variables x and y.

$x = 4y - 1$

Make y the subject of the formula.

$x + 1 = 4y$

$\frac{x+1}{4} = y$

Hence, $f^{-1}(x) = \frac{x+1}{4}$.

Now,

$f^{-1}(11) = \frac{11+1}{4}$

$= \frac{12}{4}$

$= 3$

(b) Determine the value of $hh(1)$. [2]

$h(x) = 3^x$

$h(1) = 3^1$

$= 3$

$hh(1) = h[h(1)]$

$= h(3)$

Kerwin Springer

$= 3^3$

$= 27$

(c) The function f is defined as follows:

$f: x \to x^2 - x - 2$

Complete the table below and plot the graph for the function $f(x) = x^2 - x - 2$ on the grid that follows. [6]

(Use a scale of 2 cm to represent 1 unit on both axes.)

x	-2	-1	0	1	2	3
$f(x)$	4	0	-2	-2	0	4

$f(x) = x^2 - x - 2$

When $x = -2$,

$f(-2) = (-2)^2 - (-2) - 2$

$= 4 + 2 - 2$

$= 4$

When $x = 0$,

$f(0) = (0)^2 - (0) - 2$

$= 0 - 0 - 2$

$= -2$

Kerwin Springer

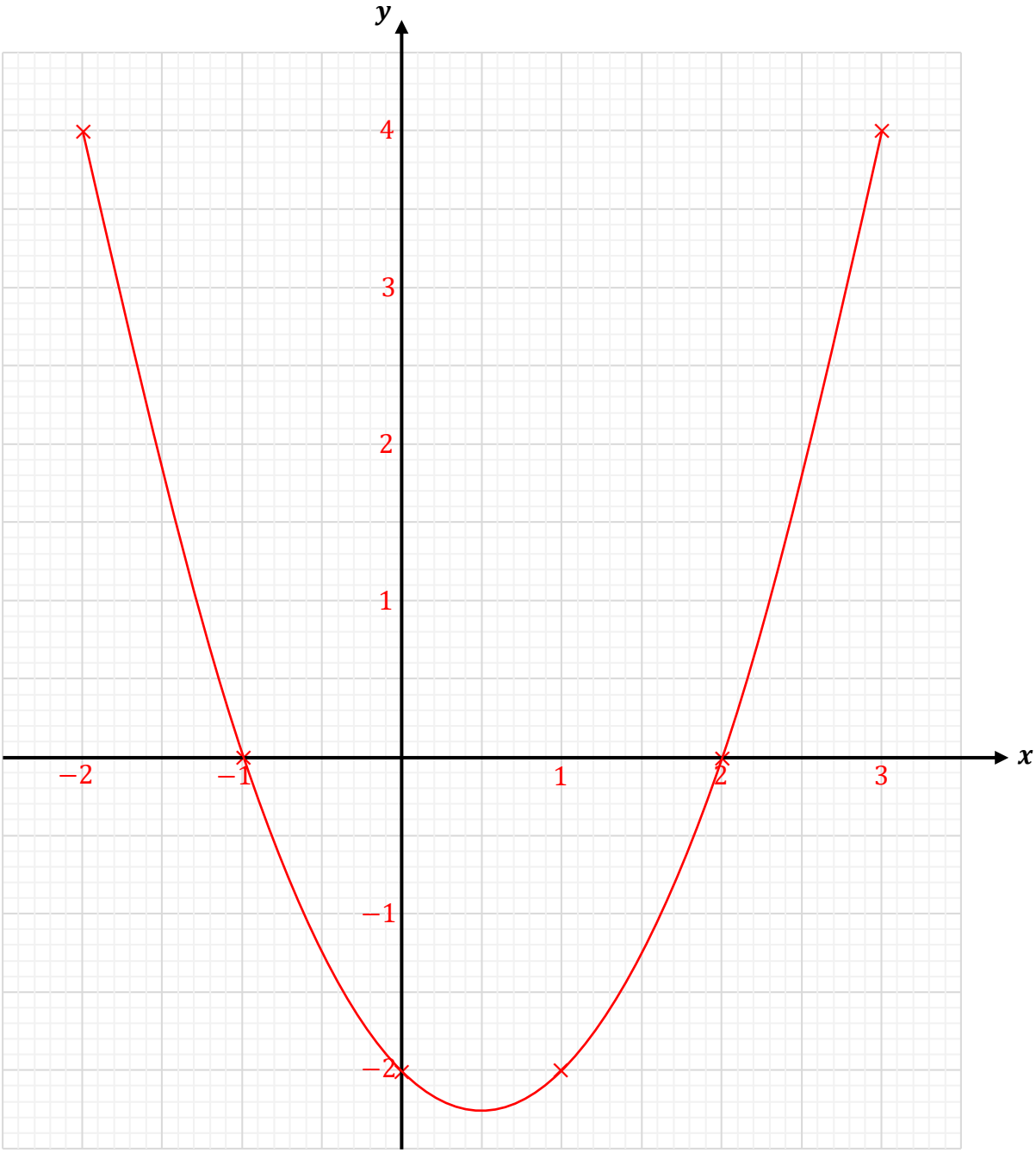

Total 12 marks

9. (a) W, X and U are points on the circumference of a circle. TV is a tangent to the circle at U. UW is a diameter of the circle and triangle WXU is isosceles.

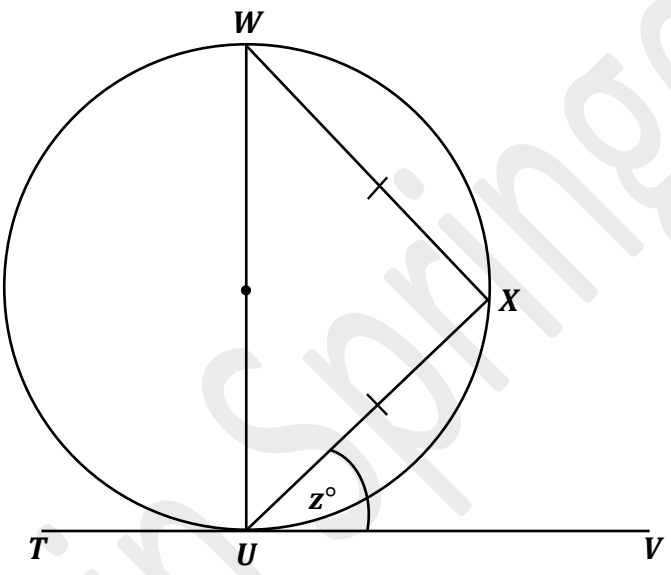

Using the appropriate theorems, state THREE reasons that explain why the measure of Angle z is 45°. [3]

Reason 1 Since WU is a diameter, then $WXU = 90°$.

The angle in a semi-circle is 90°.

Reason 2 Since triangle WXU is isosceles,

then $UWX = \frac{1}{2}(180 - 90) = \frac{1}{2}(90) = 45°$.

Kerwin Springer

Reason 3 Angle $z = 45°$.

The angle between a tangent and a chord is equal to the angle in the alternate segment.

(b) The diagram below shows a circle with diameter KF. Line EFG is a tangent to the circle at F. The points F, H, K and J lie on the circumference of the circle.

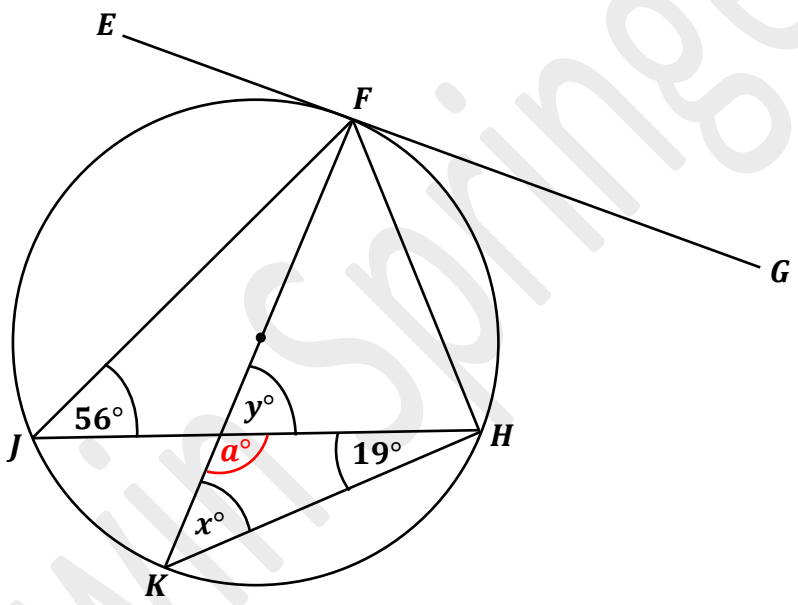

By showing EACH step in your work, where appropriate, find the value for EACH of the following angles:

(i) Angle x [1]

Angles $F\hat{J}H$ and $F\hat{K}H$ are at the circumference and standing on the same chord.

KerwinSpringer

Hence, Angle $x = 56°$.

(ii) Angle y [2]

All angles in a triangle add up to 180°.

$a = 180° - 56° - 19°$

$= 105°$

Since y and a are supplementary angles, then

$y = 180° - a$

$= 180° - 105°$

$= 75°$

Kerwin Springer

(c) The diagram below shows 4 points, P, Q, R and S on level ground, where pillars will be placed to mark the outline for a foundation.

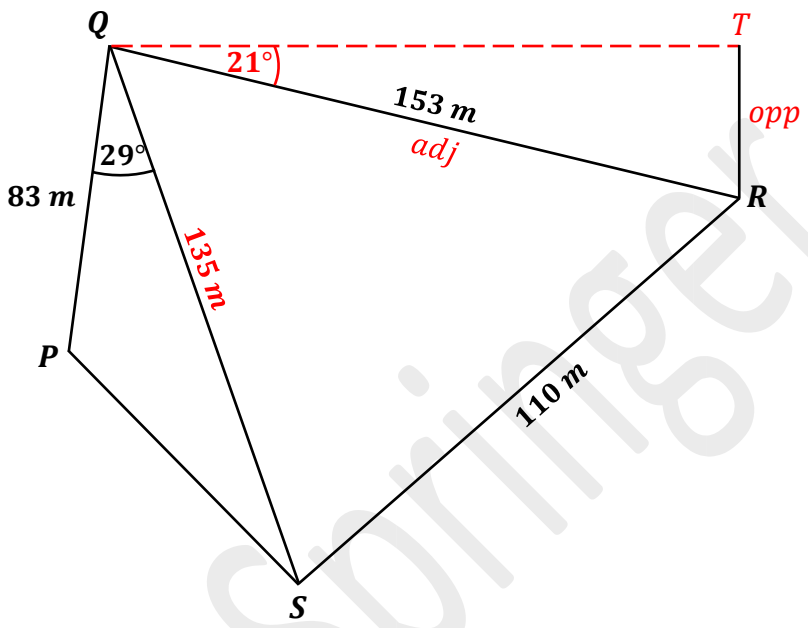

(i) There is a vertical post, RT, at R. From Q, the angle of elevation of the top of the post, T, is 21°. Find the height of the post. [2]

$$\tan\theta = \frac{opp}{adj}$$

$$\tan 21° = \frac{TR}{153}$$

$$TR = 153 \times \tan 21°$$

$$TR = 58.7\ m$$

Kerwin Springer

(ii) Given that the length QS is $135\,m$, calculate the perimeter of the foundation $PQRS$. [4]

Using cosine formula,

$(PS)^2 = (PQ)^2 + (QS)^2 - 2(PQ)(QS)\cos P\hat{Q}S$

$(PS)^2 = (83)^2 + (135)^2 - 2(83)(135)\cos 29°$

$(PS)^2 = 5514$

$PS = \sqrt{5514}$

$PS = 74.3\,m$

Now,

Perimeter of $PQRS = 83 + 153 + 110 + 74.3$

$= 420.3\,m$

Total 12 marks

Kerwin Springer

10. (a) Three matrices Q, R and S are as follows:

$$Q = \begin{pmatrix} 2 & -1 \\ 4 & 3 \end{pmatrix}, \quad R = \begin{pmatrix} 1 & 6 \\ -5 & 4 \end{pmatrix}, \quad S = \begin{pmatrix} 2 & 7 \\ 4 & -1 \\ -8 & 9 \end{pmatrix}$$

(i) Explain why the matrix product QS is NOT possible. [1]

Order of Q is 2×2.

Order of S is 3×2.

The matrix product QS is not possible because the number of columns in matrix Q is not equal to the number of rows in matrix S.

(ii) State the order of the matrix product SR. [1]

Order of S is 3×2.

Order of R is 2×2.

$\therefore$ The order of the matrix product SR is 3×2.

Kerwin Springer

(iii) Calculate the matrix product QR. [2]

Required to calculate the matrix product QR.

$$QR = \begin{pmatrix} 2 & -1 \\ 4 & 3 \end{pmatrix}\begin{pmatrix} 1 & 6 \\ -5 & 4 \end{pmatrix}$$

$$= \begin{pmatrix} (2 \times 1) + (-1 \times -5) & (2 \times 6) + (-1 \times 4) \\ (4 \times 1) + (3 \times -5) & (4 \times 6) + (3 \times 4) \end{pmatrix}$$

$$= \begin{pmatrix} 2 + 5 & 12 + (-4) \\ 4 + (-15) & 24 + 12 \end{pmatrix}$$

$$= \begin{pmatrix} 7 & 8 \\ -11 & 36 \end{pmatrix}$$

(b) Given that $A = \begin{pmatrix} 4 & -1 \\ -7 & x \end{pmatrix}$, determine the value of x when $|A| = 5$. [2]

$$A = \begin{pmatrix} 4 & -1 \\ -7 & x \end{pmatrix}$$

$$|A| = ad - bc$$

$$= (4)(x) - (-1)(-7)$$

$$= 4x - 7$$

When $|A| = 5$,

$$4x - 7 = 5$$

$$4x = 5 + 7$$

$$4x = 12$$

$$x = \frac{12}{4}$$

$$x = 3$$

Kerwin Springer

(c) In the diagram below, OPQ is a triangle. ARB and AOQ are straight lines.

B is the midpoint of PQ.

R is the midpoint of AB.

$OR : RP = 1 : 3$.

$\overrightarrow{OP} = 4\boldsymbol{a}$ and $\overrightarrow{OQ} = 8\boldsymbol{b}$.

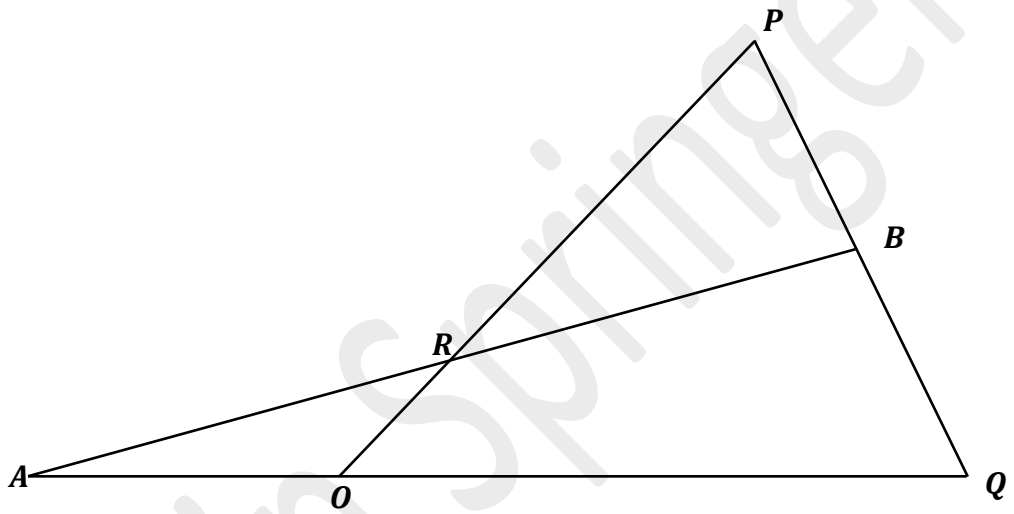

Find, in terms of $\boldsymbol{a}$ and/or $\boldsymbol{b}$, in its simplest form

(i) $\overrightarrow{PQ}$ [1]

By the triangle inequality,

$\overrightarrow{PQ} = \overrightarrow{PO} + \overrightarrow{OQ}$

$= -\overrightarrow{OP} + \overrightarrow{OQ}$

$= -4\boldsymbol{a} + 8\boldsymbol{b}$

$= 8\boldsymbol{b} - 4\boldsymbol{a}$

Kerwin Springer

(ii) $\overrightarrow{PR}$ [2]

$$\overrightarrow{PR} = \frac{3}{4}\overrightarrow{PO}$$

$$= \frac{3}{4}(-4\boldsymbol{a})$$

$$= -3\boldsymbol{a}$$

(iii) $\overrightarrow{RB}$ [3]

$$\overrightarrow{RB} = \overrightarrow{RP} + \overrightarrow{PB}$$

$$= \overrightarrow{RP} + \frac{1}{2}\overrightarrow{PQ}$$

$$= 3\boldsymbol{a} + \frac{1}{2}(8\boldsymbol{b} - 4\boldsymbol{a})$$

$$= 3\boldsymbol{a} + 4\boldsymbol{b} - 2\boldsymbol{a}$$

$$= \boldsymbol{a} + 4\boldsymbol{b}$$

Total 12 marks

END OF TEST

IF YOU FINISH BEFORE TIME IS CALLED, CHECK YOUR WORK ON THIS TEST.

Best Online Lessons in the Caribbean
WhatsApp **+1868-310-1306** for more information

Kerwin Springer